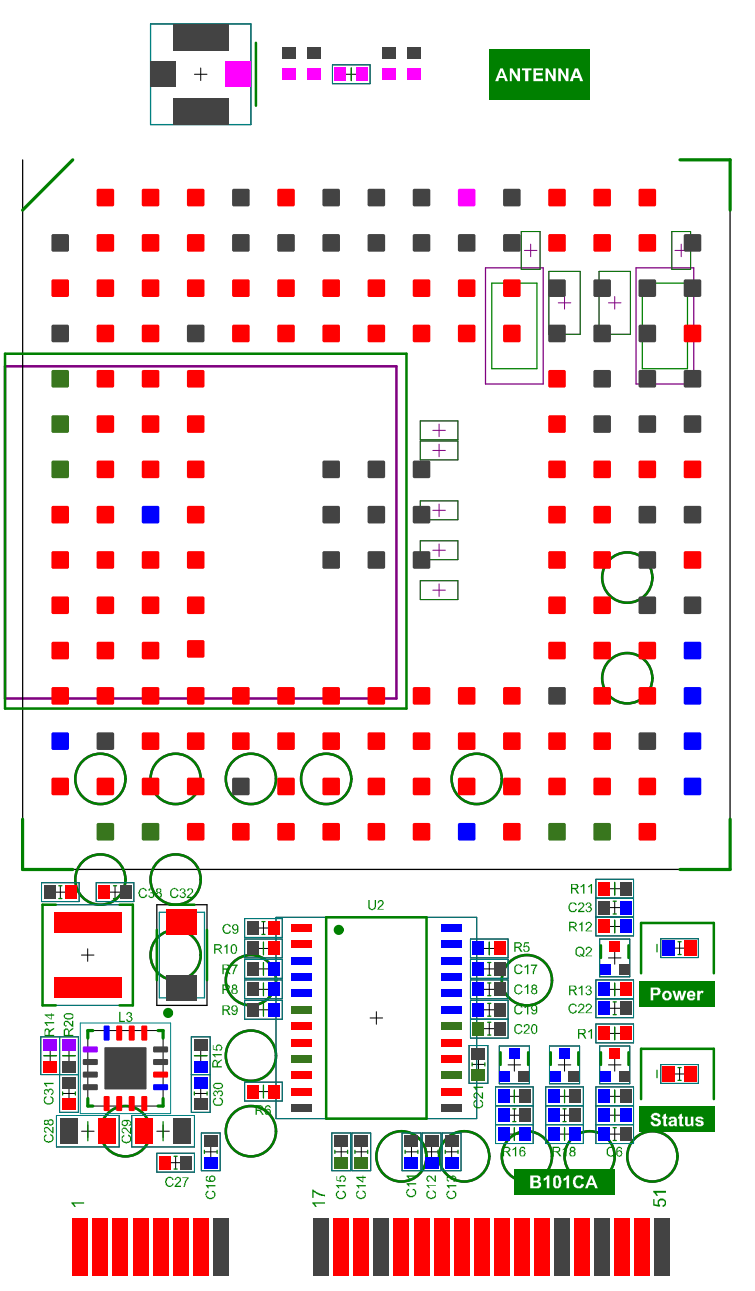
ANTENNA
C38
C32
U2
C9
R10
R7
R8
R9
R5
C17
C18
C19
C20
R11
C23
R12
Q2
R13
C22
R1
Power
Status
R14
R20
L3
C31
C28
C29
C27
C16
R15
C30
R6
C21
R16
R18
C6
C15
C14
C13
C12
C11
B101CA
1
17
51

B1016A
Micro SIM Tray
C32
C31
FB1
FB2
C24
C34
C1
D1
D2
D4
D3
M09
1V8_PMON
VUSB
TX_AUX
GPIO_09
USB D-
USB D+
RX_AUX
USB_BOOT
3V8
TX
RX
P_EN
GND
VCC
NOM
TXMAIN
RIN
FLMON
NMOS
SIM_EN

B1016A
Micro SIM Tray
C32
C31
FB1
FB2
C24
C34
C1
D1
D2
D4
D3
M09
1V8_PMON
VUSB
TX_AUX
GPIO_09
USB D-
USB D+
RX_AUX
USB_BOOT
3V8
TX
RX
P_EN
GND
VCC
NOM
TXMAIN
RIN
FLMON
NMOS
SIM_EN

B1016A
Micro SIM Tray
C32
C31
FB1
FB2
C24
C34
C1
D1
D2
D4
D3
M09
1V8_PMON
VUSB
TX_AUX
RX_AUX
USB_BOOT
GPIO_09
USB D-
USB D+
3V8
TX
RX
GND
VCC
P_EN
NOM_
YTMEMS
BR
FLMOD
NMOS
EXM_EN